FWF-CT

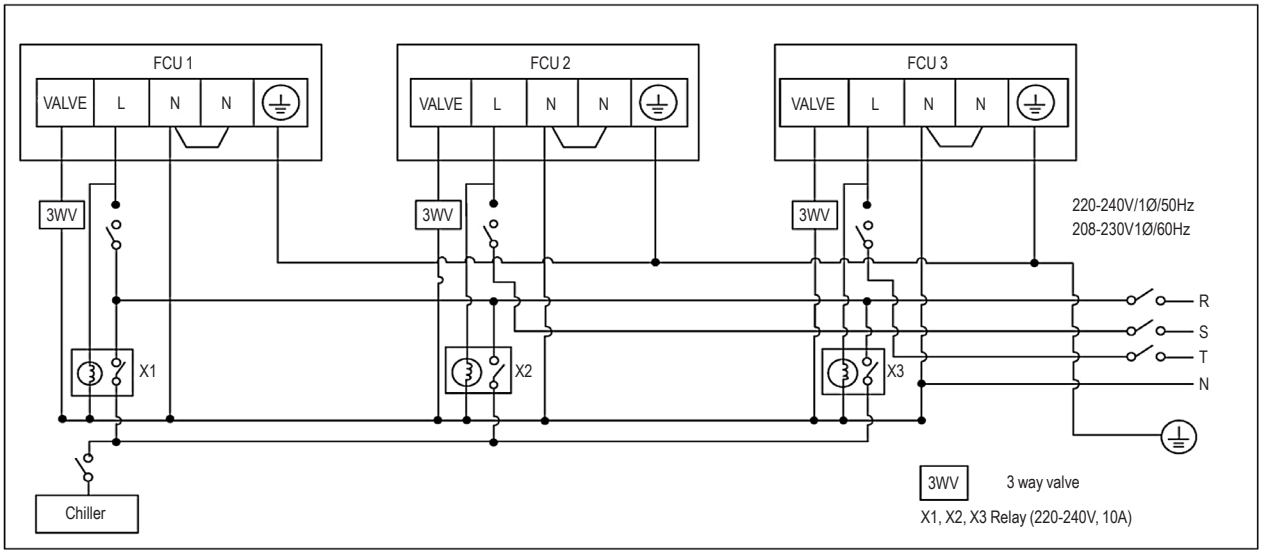
FCU 1
VALVE
L
N
N
FCU 2
VALVE
L
N
N
FCU 3
VALVE
L
N
N
3WV
3WV
3WV
220-240V/1Ø/50Hz
208-230V1Ø/60Hz
R
S
T
N
X1
X2
X3
Chiller
3WV
3 way valve
X1, X2, X3 Relay (220-240V, 10A)